MONOPHONIC SOURCE LOCALIZATION FOR A DISTRIBUTED AUDIENCE IN A SMALL CONCERT HALL

Enda Bates, Gavin Kearney, Frank Boland and Dermot Furlong

Department of Electronic and Electrical Engineering
Trinity College Dublin
Ireland

batesja@tcd.ie, gpkearney@ee.tcd.ie, fboland@tcd.ie, dermot.furlong@tcd.ie

ABSTRACT

The transfer of multichannel spatialization schemes from the studio to the concert hall presents numerous challenges to the contemporary spatial music composer or engineer. The presence of a reverberant listening environment coupled with a distributed audience are significant factors in the presentation of multichannel spatial music. This paper presents a review of the existing research on the localization performance of various spatialization techniques and their ability to cater for a distributed audience. As the first-step in a major comparative study of such techniques, the results of listening tests for monophonic source localization for a distributed audience in a reverberant space are presented. These results provide a measure of the best possible performance that can be expected from any spatialization technique under similar conditions.

Keywords: Sound localization, distributed audience, spatial music.

1. INTRODUCTION

Much of the existing research into the localization performance of spatialization techniques has been carried out under anechoic conditions for a single listener. While this approach is suitable for evaluating the optimal performance of a particular system, it does not define the capability of these systems in real reverberant concert hall environments. This is particularly relevant in the area of spatial music composition, where the process of transferring spatial locations and trajectories from the studio to the concert hall presents significant challenges. The two main factors which are particularly relevant to this issue are, early reflections and reverberation, and an extended listening area. Research is required to gauge the performance of different spatialization schemes for a distributed audience and in reverberant concert halls.

However, before any assessment of multichannel spatialization techniques can be made, it is necessary to examine the performance of monophonic sources under the same conditions. In this paper we present the results of listening tests carried out in a small sized concert hall for a distributed audience of nine people. The tests were conducted using a monophonic loudspeaker array with various stimuli and illustrate the impact of reverberation on the localization performance of a distributed audience for single sources. This will provide a base measure of the best possible performance one could expect from a spatialization technique in terms of localization accuracy, under similar conditions. We will begin this study with a brief overview of the auditory localization mechanisms, and a summary of the existing research and experimental data on source localization.

2. AUDITORY LOCALIZATION OF MONOPHONIC SOURCES

The localization of sound sources can be divided into three spatial categories, namely directional hearing in the horizontal plane, directional hearing in the median plane and "distance hearing" [1]. In this study we will limit our discussion to the horizontal plane, as this is particularly relevant for most spatial music presentations. The ability of human beings to localize auditory events in this plane depends on several key factors. These include the nature of the source signal, the acoustical environment and the diffraction effects of the upper torso and head. Of these factors, the shadowing effect of the head gives rise to interaural level differences (ILD) and ear positioning gives interaural time differences (ITD) which aid our horizontal localization [2]. The implications (and limitations) of these localization cues in the free field have been well documented in [1, 3, 4, 5] in terms of the nature of the source. There is a strong weighting for ITDs with low frequency signals and poor weighting of ITDs with high frequency signals. The converse is true for the ILD. For wideband stimuli, the ITD is found to dominate [3].

It has been shown under ideal conditions, for various source stimuli, that the region of most precise spatial hearing lies in the forward direction with frontal hearing having an accuracy of between 4.4° and 10° for most signal types [1]. Localization ability decreases as the source azimuth moves to the sides, with the localization blur at $\pm 90^\circ$ being between three to ten times its value for the forward direction. For sources to the rear of the listener, localization blur improves somewhat but is still approximately twice that for frontal sources. It is expected therefore that the localization performance of spatialization systems will follow a similar trend.

A thorough study on the effect of reverberant conditions on localization accuracy for various stimuli was presented by Hartmann [6, 7, 8]. It was shown that impulsive sounds with strong attack transients are localized independently of the room reverberation time, but may depend on the room geometry. Conversely, for sounds without attack transients, localization improves monotonically with the spectral density of the source. However, localization of *continuous* broadband noise is dependent on room reverberation time.

The source must also include significant onsets if the 'precedence effect' is to operate as an aid to localization. However, even with transients the precedence effect does not entirely eliminate the effect of early reflections [7]. In fact, the early reflec-

tions from room sides impact negatively on horizontal localization, while early reflections from the floor and ceiling help to reinforce localization. It should be noted that this is the opposite of the preferred arrangement for acoustic music in concert halls, which emphasizes lateral reflections.

3. LOCALIZATION OF STEREOPHONIC SOURCES

In assessing which systems are most applicable to the presentation of spatial music, it is relevant to discuss the development of commercial sound reinforcement and localization systems that are applicable to localization of phantom sources. The first of these is stereophonic reproduction, which refers to the creation of virtual acoustic images localized at a desired position. The original patent by Blumlein [9] in 1931 outlines two-channel stereophony around a single listener position and remains the main commercial system of sound reproduction to this day. However, presentations using this system are designed to provide accurate imaging for a single listener position only. Off-centre listening leads to inaccurate localization information since the intensity information presented to the ears becomes compromised. Three channel stereophony attempts to overcome this, but again, it does not cater for large deviations from the acoustic 'sweet spot' and does not provide any accurate localization information for anything other than the frontal plane.

The limitations of quadraphonic systems, which utilise 4 loudspeakers in laterally positioned pairs, were discussed by Ratliff [10]. It was found that quadraphonic systems are unable to create reliable phantom images, in particular for lateral imaging. This problem is attributed to the difficulty in creating interaural differences of any significance from differences between loudspeaker pairs to the same sides of the head [11]. Theile et al. [12] also carried out a number of experiments to investigate phantom imaging with loudspeaker pairs (using the optimal stereophonic loudspeaker aperture of 60°) at various lateral displacements. The results of these tests confirm Ratliff's findings that phantom images cannot be located at $\pm 90^\circ$. This led to the conclusion that a six-speaker array (at $\pm 30^\circ$, $\pm 90^\circ$ and $\pm 150^\circ$) was the optimal arrangement for an "all round effect" [12] as this would provide a physical loudspeaker at the lateral $\pm 90^\circ$ directions. The results of a listening test using this array with noise impulses and male speech indicate that reasonably good localization was achieved for a centrally positioned listener in an anechoic environment [12].

Ville Pulkki [13] created a vector-based reformulation of the amplitude panning method which extends the basic stereophonic principle to an arbitrary number of loudspeakers. A number of experiments were undertaken using this system to investigate the perceptual cues used in source localization, both for real and phantom sources. In [14] the localization of amplitude panned phantom sources in a standard stereophonic system was investigated. Of particular interest is his use of a binaural auditory model to calculate the localization cues for the audio signals used in the listening tests. These data simulations were compared with the results of the perceptual listening tests in order to verify the experimental results. It should be noted, however, that this model does not take into account the precedence effect and only gives reliable results if the sound signal arrives at the ears within a 1-ms window. The experiment was therefore carried out under anechoic conditions and a modified model would be required for tests under reverberant conditions. The results of this experiment correlate well with Blauert [1] for the following points:

- The localization of amplitude panned phantom sources is based on ITD cues at low frequencies and on ILD cues at high frequencies.
- ILD cues at high frequencies generally coincide with low-frequency ITD cues.
- Between 1100 and 2600 Hz both cues deviate from low-frequency ITD angles. These results explain why broadband phantom sources are generally well localized while narrowband signals, particularly in the region of 1.7 kHz, are inconsistently localized.

Ambisonics is another system which surpasses the limits imposed by two channel stereophony and is a very complete set of techniques for recording, manipulating and synthesizing artificial sound fields [15]. Real soundfields can be recorded using a specialized Soundfield microphone, while numerous software implementations allow for the synthesis of artificial sound fields. Ambisonics has been widely discussed and excellent overviews can be found in [16, 15]. One of the most lauded features of Ambisonics is its independence from a particular loudspeaker setup. As the encoding and decoding functions are carried out separately, it is possible to generate the desired soundfield for the available loudspeaker setup. This capability certainly gives Ambisonics an advantage over systems based on amplitude panning which require a dedicated channel per loudspeaker and a fixed arrangement of loudspeakers. However, while the localization performance of Ambisonic systems has been evaluated in a number of experiments [17, 18], there is a distinct lack of experimental data on its performance under non-anechoic conditions and for a distributed audience. Higher order Ambisonic systems will theoretically recreate the soundfield over a wider listening area but again, additional testing will be required to verify this claim. There is also a lack of consensus amongst practitioners as to the most appropriate decoding equations for different environments.

Benjamin et al. [18] carried out a series of listening tests to verify the various theories behind different Ambisonics decoder designs. The tests compared a number of different speaker arrays and decoder designs with the main variables being the number and arrangement of the loudspeakers, and the psychoacoustic models guiding the decoder design. The tests were designed to evaluate these models, and the choice of crossover frequency. Three decoders were designed, a velocity decoder in which the original pressure and particle velocity are recovered exactly, an energy decoder that maximizes the magnitude of the energy localization vector, and a shelf decoder which optimizes the velocity vector at low frequencies and the energy vector at mid frequencies. These three configurations were then applied to the decoding equations for square, rectangular and hexagonal arrays to generate the test signals. The source signals used in the test consisted of continuous bandpass filtered noise, voice recordings, various music recordings, applause and fireworks. The listeners were free to switch between the arrays and sources, move their heads and seating position and were asked to judge a number of attributes such as the directional accuracy of localization, tonal balance and image stability. The results of the test indicated that the hexagonal array was preferred by all listeners. The rectangular and square arrays were judged to exhibit poor lateral imaging although the rectangular array was comparable to the hexagonal array when the material was limited to a frontal source with ambience. Of the four decoder types tested, the shelf filter decoder was preferred for most sources as it produced the most focused sources with the least artifacts. One interesting conclusion drawn from this test was that

changes in layout make significantly more difference than changes in decoder. Benjamin et al. also note that the choice of preferred decoder was strongly dependent on the program material and the size of the intended listening area. Finally, it should be noted that initially this test was carried out in an ordinary room without any acoustic treatment. It was reported that good localization was not achieved and therefore no experimental data was reported from these initial tests.

It is felt by the authors that these reported studies show that both the vector-based amplitude panning and Ambisonics formats offer much to the production of spatial music in a studio environment. What is unclear, however, is the ability of such systems to cater for the localization requirements of a distributed audience in a concert hall environment.

4. SOUND LOCALIZATION FOR A DISTRIBUTED AUDIENCE

There are numerous challenges associated with the localization of sources for distributed audiences. In particular, for systems based on stereophonic principles, it is extremely difficult to present accurate wavefronts for correct ITD/ILD cues at off-centre listening positions. Even for Ambisonics, which has been used extensively in theatre and electro-acoustic music concerts, there has been very little published on the actual performance of the system under these conditions. David Malham has worked on a number of large-area Ambisonics systems and has published one of the few papers on this topic [15]. The paper informally covers the experiences of the author in implementing large scale Ambisonics systems in a number of different theatres. The main conclusions of the paper are as follows:

- Informal tests demonstrated that Ambisonics worked effectively with a hexagonal array of diameter 14.5m.
- Non-central listening positions produced distortions in the sound field positions.
- Audience screening is a significant problem for periphonic, three dimensional presentations.
- It is important to distinguish between imaging problems caused by system faults and those resulting from systematic errors caused by the acoustics of the projection space or the nature of the sound being projected
- Decoding based on the diametrically opposed pairs theorem performs poorly for large arrays and should only be used for small listening areas.
- Fast moving sounds were more easily localized.
- The system can work well even for listeners placed outside the array, but not for listeners seated on the surface of the notional sphere of the loudspeaker array.
- The acoustics of the venue strongly influence the effectiveness of the system.

Another system worthy of mention for distributed audiences is the Delta Stereophony System (DSS) as it prioritises in delivering the correct wavefronts for accurate source localization and boasts true perspective and depth [19]. DSS is largely based on the precedence effect and is an approach which ensures that each listener in an auditorium receives the direct sound from the original sound source direction first, before that of reinforcement speakers placed about the audience area [20]. In that it was intended for sound reinforcement system use in large auditoria, it employs a distributed loudspeaker network, with loudspeakers typically positioned throughout an auditorium. The main objective of DSS is to reinforce an original sound event while also maintaining at least an approximately accurate sound source localization. This can be achieved if the listener at any place in the room receives the first wavefront from the direction of the sound event being reinforced, rather than from any of the other loudspeaker positions [21]. Since the development of DSS in 1975, it has been installed in concert halls in Berlin, Prague, Munich, Stade, Stuttgart, Tokyo, and the Moscow Kremlin Palace [22]. It has also been applied with great success in open air theatres such as the Lake Festival Bregenz (Austria), Trachselwald (Switzerland), and Waldbuhne, Berlin. Further examples of DSS implementations can be found in [23, 24]. Ahnert gives an excellent review of DSS design in [20], but the actual subjective system performance in terms of localization accuracy in a reverberant environment for a distributed audience, and for differing source material, still has to determined. It is felt by the authors that since the DSS is designed for the accurate localization of sources, it is worthy for inclusion in the assessment of systems applied to spatial music presentations.

5. TOWARDS ASSESSMENT OF SPATIAL ENHANCEMENT SYSTEMS

In order to gauge effectively the subjective performance of any spatial enhancement system in a reverberant environment, it is first necessary to study the effect of room acoustics on localization accuracy, in particular for distributed audiences. This can then be considered as the 'best case' scenario for any sound system in the same environment. In light of this, and as a precursor to studies by the authors for testing the localization accuracy of various spatial enhancement systems [25, 26], a series of experiments were set up in a small sized concert hall in Trinity College Dublin. The hall, shown in Figure 1, has a reverberation time (RT60) of 1.1 seconds at 1kHz. A loudspeaker array consisting of 16 Genelec 1029A

Figure 1: Printing House Hall in Trinity College Dublin showing listener/loudspeaker setup.

loudspeakers was arranged around a 9 listener audience area as shown in Figure 2. A PC utilising a MOTU896 audio interface

was used to route the audio to the loudspeakers. The loudspeakers

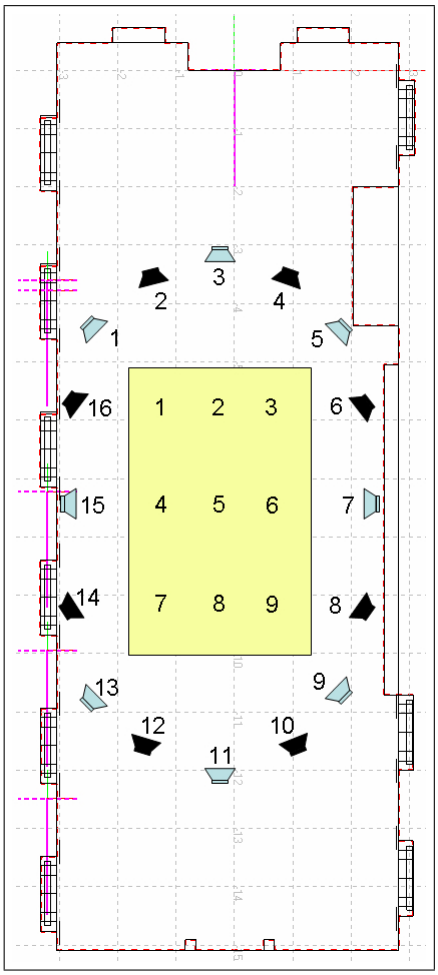

Figure 2: Geometry of loudspeaker array and audience area for monophonic listening tests.

were calibrated to 70dBA at 1m from the on-axis tweeter position and their axis lines were coincident with the centre listener position. The audience was presented with monophonic sound from pseudorandom positions located about the speaker array and were then asked to identify the location of the sources via a questionnaire running concurrently with the tests. This randomized method was used to negate any order effects during the tests.

In these tests, only the 8 black loudspeakers shown in Figure 2 were used for the monophonic presentations, and the other 'dummy' loudspeakers were used to increase the choice of angle for the listeners. In order to assess the effect of various stimuli, users were presented with 1 second unfiltered recordings of male speech, female speech, Gaussian white noise and music with fast transients. Each sample was presented twice, followed by a short interval before the next presentation. Listeners were asked to keep their heads in the forward direction and the angular conventions employed in the analysis at each individual listener position are shown in Figure 3. Upon completion of one iteration of the test each listener was asked to move to the next seat for another randomised iteration.

Each of the listeners' answers were weighted, depending on

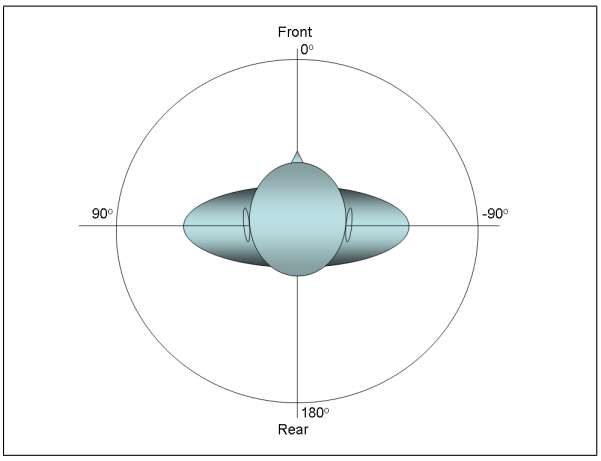

Figure 3: Angular conventions with respect to individual listener positions.

the confidence level of the listener with their choice, with weightings of $1/n$, where n is the number (or range) of speakers that a listener felt the sound originated from. From this, the histogram $\{h(\theta_i)\}_{i\in[1:16]}$ collecting all the listeners' answers is computed for each seat. The angular mean $\bar{\theta}$ and the unbiased standard deviation σ_θ at each listener position are computed:

$$\bar{\theta} = \frac{\sum_{i=1}^{16} h(\theta_i)\cdot\theta_i}{\sum_{i=1}^{16} h(\theta_i)} \tag{1}$$

$$\sigma_\theta = \sqrt{\frac{\sum_{i=1}^{16} h(\theta_i)(\theta_i-\bar{\theta})^2}{(\sum_{i=1}^{16} h(\theta_i))-1}} \tag{2}$$

In some rare situations anomalous statistical outliers would occur with large deviations from the data set and actual loudspeaker angle θ_T. Such anomalies were attributed to inattentive listeners or individual listener problems during the tests. These anomalies were removed from the histogram. Consequently in these rare cases, the term $\sum_{i=1}^{16} h(\theta_i)$ becomes less than the number of listeners (i.e. < 9) but is never less than 8.

Figures 4, 5, 6 and 7 show the results of the measurements taken [1]. Each figure contains four graphs indicating the measured localization data for each source signal. Note that the Y-axis limits on each graph set is different to accommodate the resolution at each listener position. The individual plots show the mean $\bar{\theta}$ (circle), twice the deviation $2\sigma_\theta$ (whiskers) and presented localization angle, or ground truth (square) from the perspective of each listener position. Figure 4 shows the results for a frontal presentation from speaker 2. One can note the following:

1. The mean results for all source signals match the presented source angle except for white noise at listening position 6.
2. All sources were localized to the presented location with zero deviation except for white noise with a deviation of $\pm 7.4°$ about the mean at listening position 6.

These results indicate that the localization accuracy of a distributed audience for a frontal source is quite good, and is largely independent of the type of source signal used.

[1] High resolution images of these test results can be found at the following URL: `http://www.mee.tcd/~gkearney/DAFX07/`

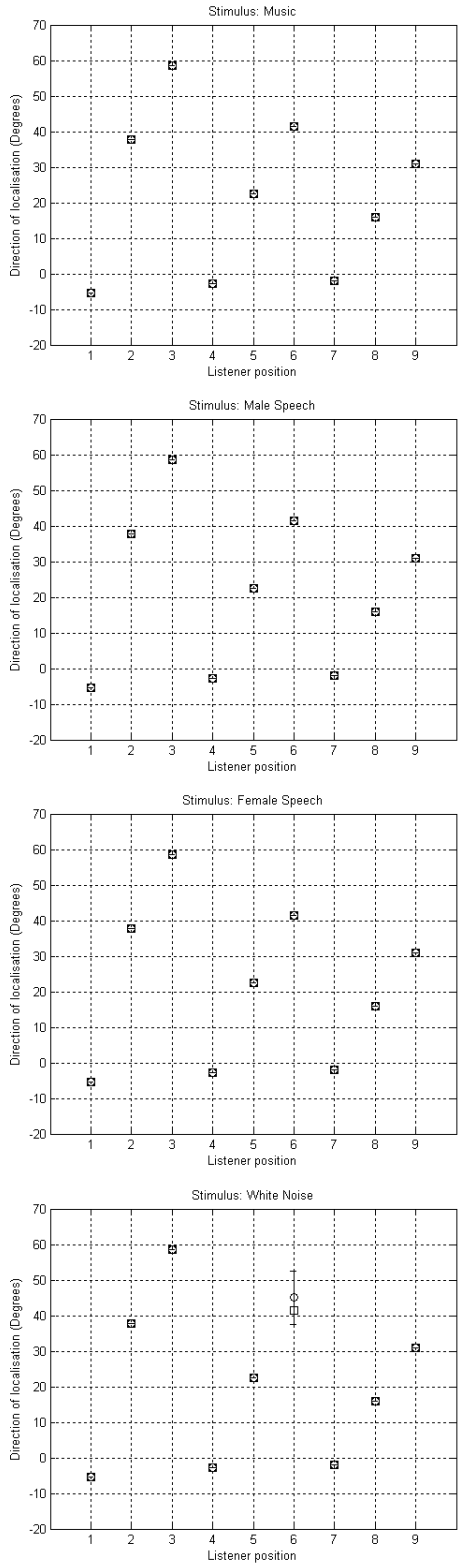

Figure 4: Subjective localization of source stimuli presented at loudspeaker 2 for all listener positions. ◯ = $\bar{\theta}$, □ = θ_T, ⊢⊣ = $\pm\sigma_\theta$

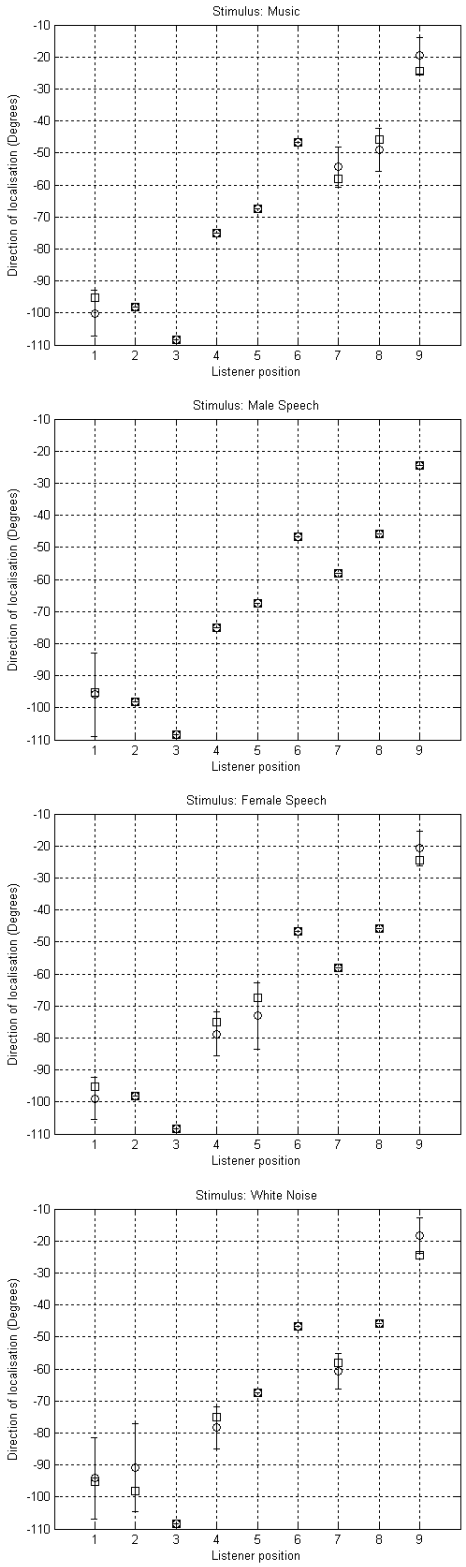

Figure 5: Subjective localization of source stimuli presented at loudspeaker 6 for all listener positions. ◯ = $\bar{\theta}$, □ = θ_T, ⊢⊣ = $\pm\sigma_\theta$

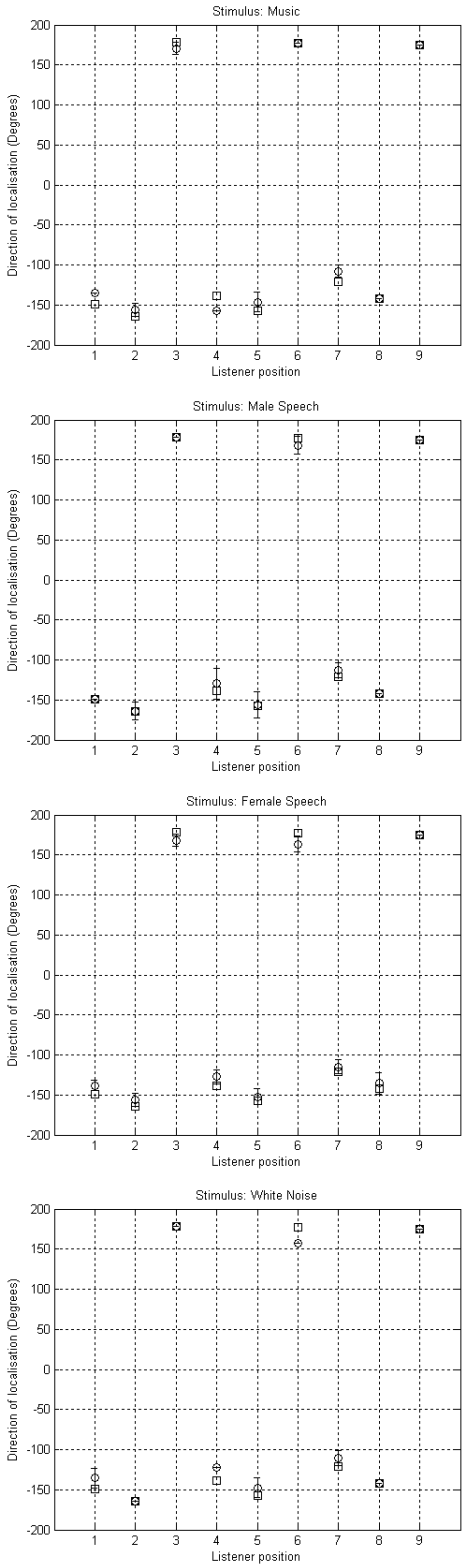

Figure 6: Subjective localization of source stimuli presented at loudspeaker 10 for all listener positions. ◯ = $\bar{\theta}$, □ = θ_T, ⊢⊣ = $\pm\sigma_\theta$

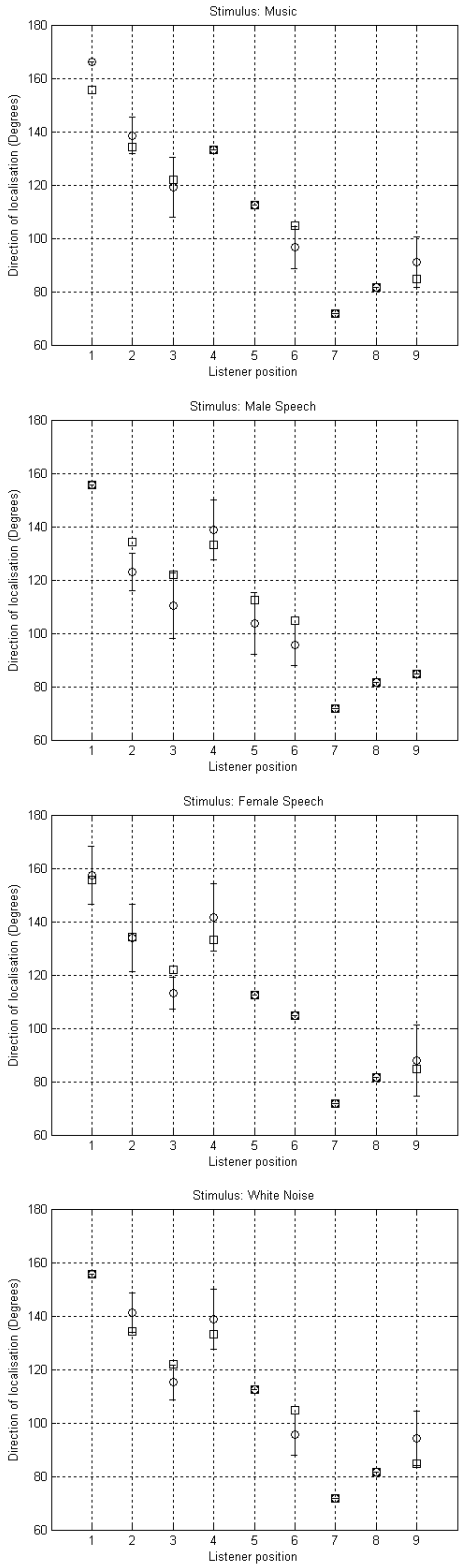

Figure 7: Subjective localization of source stimuli presented at loudspeaker 14 for all listener positions. ◯ = $\bar{\theta}$, □ = θ_T, ⊢⊣ = $\pm\sigma_\theta$

Figure 6 shows the results of a rear presentation from speaker 10. One can note the following:

1. 6 of the 9 mean results for male speech match the presented localization angle well. 4 of the 9 mean results were similarly matched for white noise, while 3 and 1 of the mean results matched for music and female speech sources, respectively.
2. All source signals were well localized with zero deviation at listening position 9, the closest to the presenting loudspeaker.
3. All source signals were similarly accurately localized at listener position 8. However the result for female speech showed a deviation of $\pm 13.6°$.

The mean results show that male speech was localized with the highest degree of accuracy. As expected, localization blur is generally greater at the rear than for frontally positioned sources.

Figure 5 shows the results of a lateral presentation from speaker 6 (right, front). The results indicate the following:

1. The mean results for male speech all match the presented location angle with zero deviation, apart from listening position 1, which shows a deviation of $\pm 12.94°$.
2. The highest number of correct results with zero deviation occurred for male speech (8), while 5 similar results occurred for the other three source signals.
3. Good localization was again achieved at the listening positions closest to the presenting loudspeaker (positions 3 & 6) for all source signals.

The mean results for this presentation indicate that all sources were reasonably well localized. Male speech again performed better than the other source signals.

Figure 7 shows the results of a second lateral presentation from speaker 14 (back, left). One can note the following:

1. 4 of the 9 mean results for each source signal match the presented localization angle.
2. All sources were well localized at the listening positions (7 & 8) closest to the presenting loudspeaker.
3. The results at other listening positions show wide deviations.

6. DISCUSSION

The above results indicate that monophonic sources can be reasonably well localized by a distributed audience under reverberant conditions. The results also show that localization accuracy is greatest for frontal sources with a frontally-biased lateral source providing the next best results. The results for rear and rear-biased lateral sources were largely comparable.

The results for music, white noise and female speech were comparable, while the best localization was achieved for male speech. Informal discussions after the experiment revealed that the general consensus among the test subjects was that white noise was the most difficult signal to localize. These results match the findings of other localization studies [1] which also indicate that localization accuracy is greater for speech than for broadband noise.

The subjects were tested using a forced-choice, speaker identification method which could explain the high degree of correlation between the mean results and presented angle. The range of deviation varies considerably for different listening and source positions which is perhaps unsurprising considering the non-ideal listening conditions. A number of studies [6, 27], have shown that localization accuracy decreases with increasing levels of reverberation. These findings were supported by our results which show a wider range of angular deviation than reported in similar studies [12] carried out under anechoic conditions.

In addition, one would expect the presence of early reflections and in particular, the lateral reflections typical of most concert halls, to similarly reduce localization accuracy. The test room contained a number of hard flat surfaces, in particular the two side walls, which presumably generated significant reflections. An analysis was therefore carried out on those test results where the mean deviated from the presented angle.

The results for listening positions 1, 4, 5 & 7 for a source at speaker 10 all display a negative angular bias. This would seem to suggest the influence of a specific reflection. Likewise, the results at listening positions 6 and 9 for a source at speaker 14 all display a positive angular bias. This bias, combined with the close proximity of the loudspeaker to the left wall seems also to suggest the influence of a lateral reflection on localization.

However, the difficulties in correlating angular biases such as these to specific reflections are well known and highly applicable here. In a previous study, Hartmann et al. proposed that when the azimuth of the reflection competes with the azimuth of a direct sound, subject's responses will be biased in the direction of the reflections [7]. He then went on to show that the effect of even a single reflection does not influence the perceived direction in this linear way. Data simulations and specific impulse response measurements could potentially reveal further information on the precise effect of early reflections on source localization in this particular case.

Although significant deviations were found, the results are nonetheless encouraging and seem to indicate a reasonable level of localization accuracy even under such non-ideal conditions. The angular deviation varied for different listening and source positions but never exceeded a maximum value of approximately $30°$. An examination of the extreme situations, i. e. where the angle from a listening position to a pair of speakers is at a minimum, could help reveal the cause of these deviations. The results for frontal sources were highly accurate and so will not be considered here. The extreme condition for a source presented at speaker 6 occurs for listening position 9. The results indicate a deviation of approximately $\pm 6°$ for this position with the mean result being biased by approximately $6°$ towards speaker number 4. The extreme condition for a source presented at speaker 14 occurs at listening position 1. The results show zero deviation for all sources except female speech ($\pm 10.93°$) while the mean results match the presented angle for white noise and male speech, with the music source displays a bias of $10.6°$ toward speaker 12. The extreme condition for a source presented at speaker 10 occurs at listening position 3. The results show zero deviation and a matching mean angle for white noise and male speech. The other sources display a deviation of approximately $\pm 8°$ and a mean bias of approximately $10°$ toward speaker 8.

These results suggest that for most combinations of listening and source position, the localization blur is not sufficiently strong to cause a listener to localize a monophonic source to the wrong location when using an asymmetrical 8-speaker array. However, for extreme cases such as a front-corner listening position with a

source positioned to the rear, then correct localization cannot be guaranteed. This problem appears to depend on the nature of the source signal.

7. CONCLUSION

The presented results for the given configuration and reverberant environment show that the localization of monophonic sources can be achieved well in a reverberant environment for a distributed audience. For the monophonic sources presented, it was found that, on average, the localization blur is not sufficient to cause localization in the direction of the wrong loudspeaker. It was noted, however, that at extreme listener/source positions, correct localization may not be guaranteed with certain source stimuli. Furthermore, it was shown that the best stimulus for localization in a reverberant environment is male speech. Simulations and further empirical investigations to support the subjective tests of this research should also be undertaken.

These results also form a 'best case' scenario for any spatialization technique, since the presented environment pertains to a real listening situation and not ideal anechoic conditions. As such, the study undertaken provides a strong basis for comparative studies of the performance of spatialization techniques in terms of localization accuracy and their technological relevance for music performance situations.

8. ACKNOWLEDGEMENTS

The authors wish to thank all the participants of the listening tests in particular the research postgraduates of the Department of Electronic and Electrical Engineering and the Music and Media Technology course, Trinity College Dublin. The assistance of Dr. Rozenn Dahyot is also greatly appreciated.

9. REFERENCES

[1] J. Blauert, *Spatial Hearing*, MIT Press Cambridge MA, 2003.

[2] J.W.S. Rayleigh, *Theory of Sound*, Dover, N.Y., 1945.

[3] E. A. MacPherson and J. C. Middlebrooks, "Listener weighting of cues for lateral angle: The Duplex Theory of sound localization revisited," *Journal of the Acoustical Society of America*, vol. 111, pp. 2219–2236, May 2002.

[4] S. G. Weinrich, "Horizontal plane localization ability and response time as a function of signal bandwidth," in *Audio Engineering Society Preprint 4007; AES Convention 98*, February 1995.

[5] T. T. Sandel, D. C. Teas, W. E. Feddersen, and L. A. Jeffress, "Localization of sound from single and paired sources," *Journal of the Acoustical Society of America*, vol. 27, pp. 842–852, July 1955.

[6] W. M. Hartmann, "Localization of sound in rooms ," *Journal of the Acoustical Society of America*, vol. 74, pp. 1380–1391, Nov. 1983.

[7] B. Rakerd and W. M. Hartmann, "Localization of sound in rooms, II: The effects of a single reflecting surface," *Journal of the Acoustical Society of America*, vol. 78, pp. 524–533, Aug. 1985.

[8] B. Rakerd and W. M. Hartmann, "Localization of sound in rooms, III: Onset and duration effects ," *Journal of the Acoustical Society of America*, vol. 80, pp. 1695–1706, Dec. 1986.

[9] A. Blumlein, "Improvements in and relating to sound transmission, sound recording, and sound reproducing systems," British Patent Specification 394325, 1931.

[10] P. A. Ratliff, "Properties of hearing related to quadraphonic reproduction," BBC Research Department, Report BBC RD 1974/38, November 1974.

[11] F. Rumsey, *Spatial Audio*, Focal Press, 2001.

[12] G. Theile and G. Plenge, "Localization of lateral phantom sources," *Journal of the Audio Engineering Society*, vol. 25, pp. 196–200, 1977.

[13] V. Pulkki, "Virtual sound source positioning using vector base amplitude panning," *Journal of the Audio Engineering Society*, vol. 45, pp. 456–466, 1997.

[14] V. Pulkki, "Localization of amplitude-panned virtual sources i: Stereophonic panning," *Journal of the Audio Engineering Society*, vol. 49, pp. 739–751, 2001.

[15] D. G. Malham, "Experience with large area 3-D ambisonic sound systems," *Institute of Acoustics*, vol. 8, pp. 209–216, 1992.

[16] M. A. Gerzon, "Criteria for evaluating surround-sound systems," *Journal of the Audio Engineering Society*, vol. 25, pp. 400–408, 1977.

[17] J. M. Jot, V. Larcher, and J. M. Pernaux, "A comparative study of 3-D audio encoding and rendering techniques," in *16th International Conference of the Audio Engineering Society*, 1999, pp. 281–300.

[18] E. Benjamin, R. Lee, and A. J. Heller, "Localization in horizontal-only ambisonic systems," in *121st Convention of the Audio Engineering Society*, 2006.

[19] N. Sobol, "The DSP 610 - a computer controlled processor for a truly directional sound reinforcement system (the Delta Stereophony System)," in *Audio Engineering Society 6th International Conference*, 1988.

[20] W. Ahnert, "Complex simulation of soundfields by the Delta Stereophony System (DSS)," *Journal of the Audio Engineering Society*, vol. 35, pp. 643–652, 1987.

[21] P. Fels, "20 years Delta Stereophony System - high quality sound design," in *100th Convention of the Audio Engineering Society*, 1996.

[22] W. Hoeg, F. Steffen, and G. Steinke, "Delta Stereophony: A sound system with true direction and distance perception for large multipurpose halls," *Journal of the Audio Engineering Society*, vol. 31, pp. 500–511, 1983.

[23] P. Fels, "Multichannel and 'SOR' principles for conferencing and teleconferencing systems," in *110th Convention of the Audio Engineering Society*, 2001.

[24] W. Ahnert, "Problems of near-field sound reinforcement and of mobile sources in the operation of the Delta Stereophony System (DSS) and computer processing of the same," in *82nd Convention of the Audio Engineering Society*, 1987.

[25] E. Bates, G. Kearney, D. Furlong, and F. Boland, "Localization accuracy of advanced spatialisation techniques in medium-sized concert halls," in *153rd Meeting of the Acoustical Society of America*, June 2007.

[26] G. Kearney, E. Bates, D. Furlong, and F. Boland, "A comparative study of the performance of spatialisation techniques for a distributed audience in a concert hall environment," in *31st International Conference of the Audio Engineering Society*, June 2007.

[27] C Giguere and S. M. Abel, "Sound localization: Effects of reverberation time, speaker array, stimulus frequency, and stimulus rise/decay," *Journal of the Acoustical Society of America*, vol. 94, pp. 796–776, 1993.